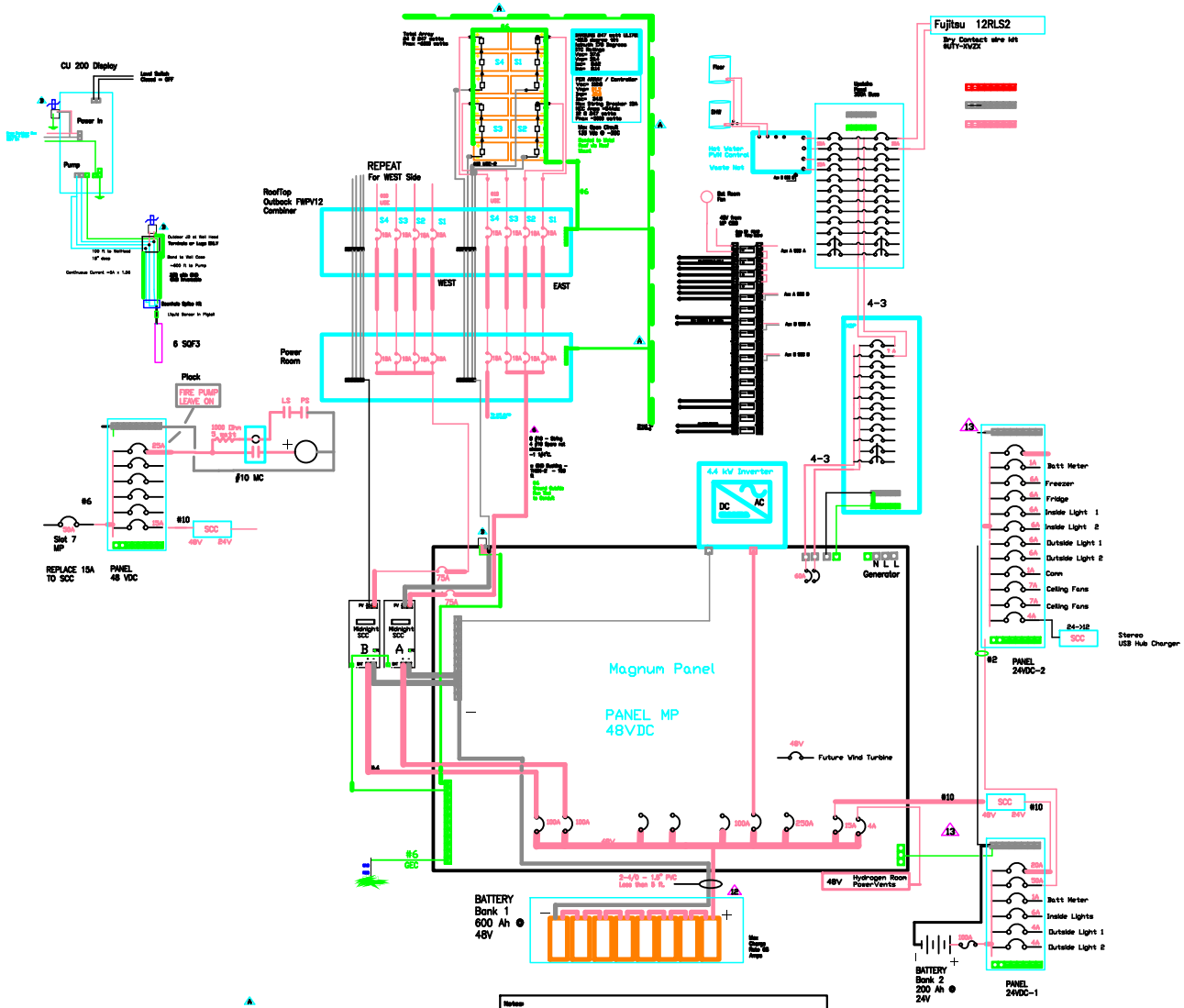
CU 200 Display
Power In
Pump
6 SQF3
Plock
FIRE PUMP LEAVE ON
LS
PS
#10 MC
#6
Slot 7 MP
REPLACE 15A TO SCC
PANEL 48 VDC
#10
SCC
48V
84V
REPEAT
For WEST Side
RooTop Outbock FWPV12 Combiner
WEST
EAST
Power Room
Fujitsu 12RLS2
Dry Contact wire kit RUTY-XWZX
Hot Water PUM Control
Waste Net
4-3
4.4 kW Inverter
DC
AC
Generator
Magnum Panel
PANEL MP
48VDC
Future Wind Turbine
Hydrogen Room Power-Vents
BATTERY
Bank 1
600 Ah @
48V
BATTERY
Bank 2
200 Ah @
24V
Batt Meter
Freezer
Fridge
Inside Light 1
Inside Light 2
Outside Light 1
Outside Light 2
Comm
Ceiling Fans
Ceiling Fans
Stereo
USB Hub Charger
PANEL
24VDC-2
Batt Meter
Inside Lights
Outside Light 1
Outside Light 2
PANEL
24VDC-1
#6
GEC
Midnight SCC
B
A
Lighting Protection
Midnight MNSPG300
Notes:
1. Battery and ALL BATTERY DC Terminals Covers Stay Installed
2. Terminal & Fuses connections as per Battery Instructions.
3. Disconnect Negative BATTERY Lead or both prior to Service on Power Panel
4. Repairs carried by Professionals, experienced or certified in DC Renewable Energy Systems.
5. PV Module circuits present when Module exposed to light. Disconnect at Solar Panels to Service with MC4 Tool
6. Less than DC Voltage drop at Rated output. SCC max self Rating is 44A on Input at 48V.
7. Annual Battery Inspection as per Recommendations by Battery Manufacturer
8. Energy Fault Protection for the PV Array in Solar Charge Controllers.
9. Use 90 C Wire on DC Conductors
10. Connections Torqued as per Equipment Instructions.
11. Wiring conforms to Less than 3% Vdrop at all wire runs
12. Wiring and Fuses meet NEC 690.9 (B) / (C) NEC Notes
13. Wire runs 24, #6-#8, 25, #8-#6, 26, #1 runs, 36 or DC conformal -screw point to Identify
Ver 10 10/06/2021
Renewable Energy System for Office of Alpine Public Office Near Island Park
Drawn by: DCL
Alpine Energy Group LLC
Date: 10/06/2021
Scale: NTS
Ver 10 10/06/2021